These drawings and specifications are the property of Interconnect Systems Inc., and shall not be reproduced, or copied, or used without prior written permission.

REVISIONS				
REV	DESCRIPTION	ECN	DATE	RELEASE
1	SALES RELEASE			

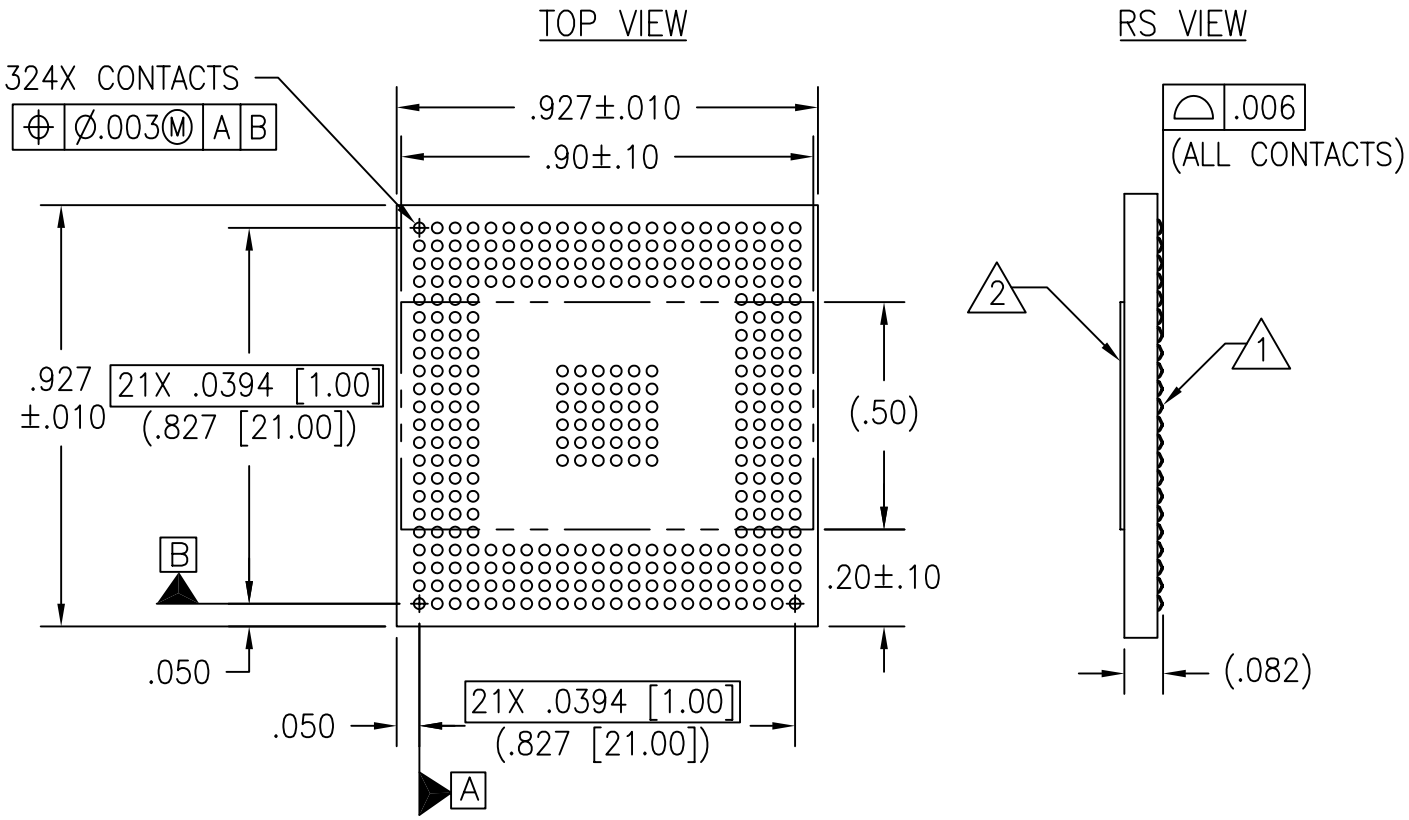

NOTES:

1. CONTACT MATERIAL: BERYLLIUM COPPER.
   CONTACT PLATING: HARD GOLD OVER NICKEL.
2. INSULATOR MATERIAL: FR4
3. KAPTON TAPE FOR PICK AND PLACE.
4. REFER TO ISI HiLo APPLICATION GUIDELINES FOR LAND PATTTERN, STENCIL DESIGN AND KEEP OUT ZONE RECOMMENDATIONS.

UNLESS OTHERWISE SPECIFIED:
DIMENSIONS ARE IN INCHES
TOLERANCES:
ANGLES: ±
FRACTIONS: ±1/64
DECIMALS:
.XX ±.010
.XXX ±.005
.XXXX ±.0005

CONTRACT NO.
DRAWN BY DATE
DESIGNER DATE
CHECKER DATE
QA DATE
PROCESS ENG. DATE

INTERCONNECT SYSTEMS INC.
708 VIA ALONDRA, CAMARILLO, CA 93012

TITLE
HiLo SOCKET
22 X 22, 324 SOCKETS
1mm PITCH

SIZE	SCALE	DRAWING NO.	REV
A	N/A	HLS-220324-B-10	1

SAVED AS: HLS-220324-B-10 FINISHED ASSY: HLS-220354-B-10 SHEET 1 OF 1

ASIZE