These drawings and specifications are the property of Interconnect Systems Inc., and shall not be reproduced, or copied, or used without prior written permission.

REVISIONS				
REV	DESCRIPTION	ECN	DATE	RELEASE
1	SALES RELEASE			

TOP VIEW

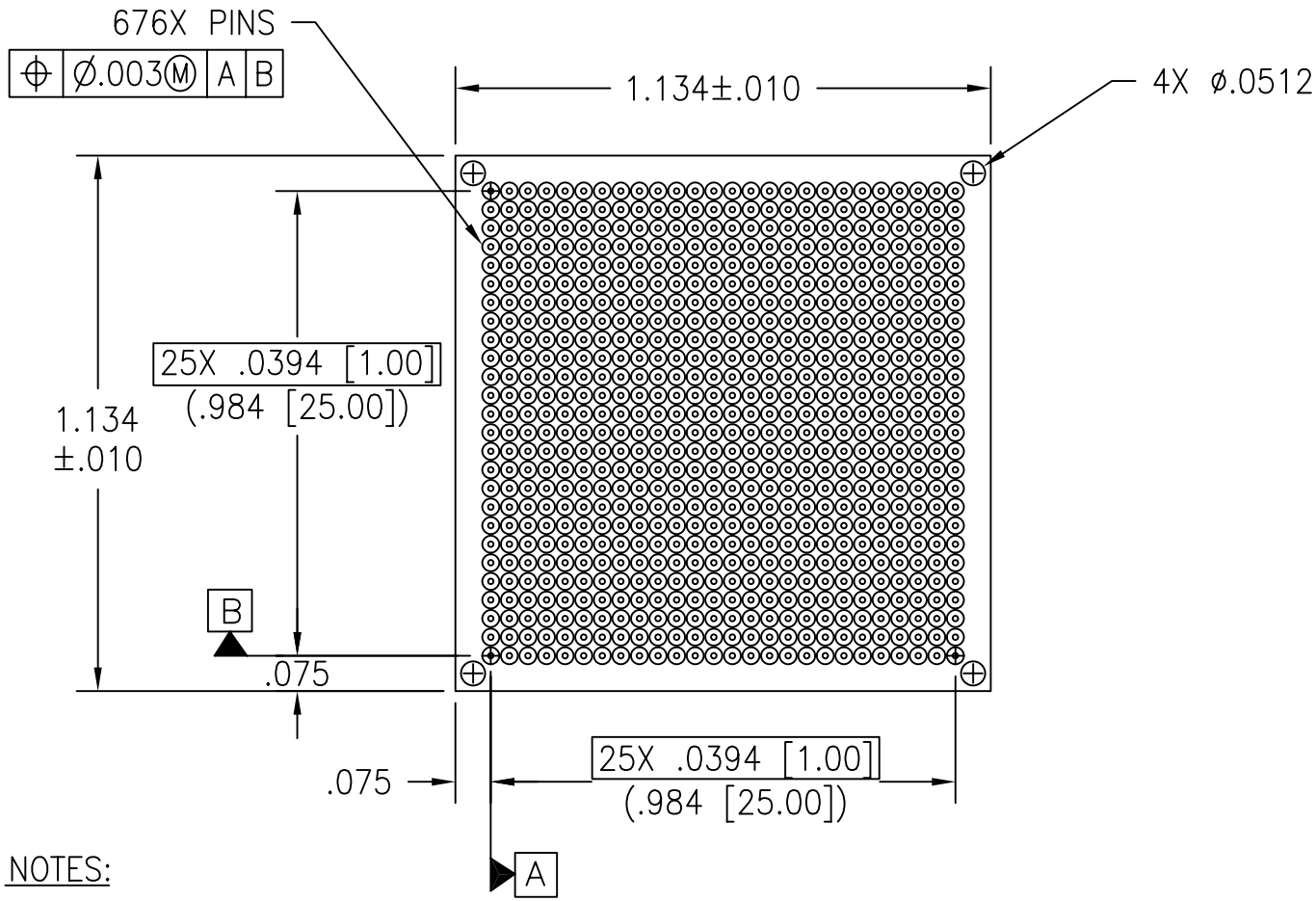

RS VIEW

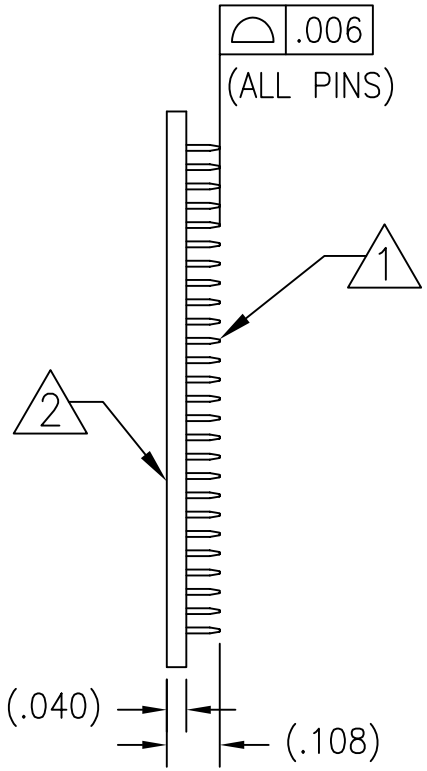

NOTES:

1. PINS ø.0117
MATERIAL: PHOSPHOR BRONZE.
PLATING: HARD GOLD OVER NICKEL.

2. INSULATOR MATERIAL: FR4.

UNLESS OTHERWISE SPECIFIED:
DIMENSIONS ARE IN INCHES
TOLERANCES:
ANGLES: ±
FRACTIONS: ±1/64
DECIMALS:
.XX ±.010
.XXX ±.005
.XXXX ±.0005

CONTRACT NO.		
DRAWN BY	DATE	
DESIGNER	DATE	
CHECKER	DATE	
QA	DATE	
PROCESS ENG.	DATE	

INTERCONNECT SYSTEMS INC.
708 VIA ALONDRA, CAMARILLO, CA 93012

TITLE
HiLo-BGA PIN BASE
26 X 26, 676 PINS
1mm PITCH

SIZE	SCALE	DRAWING NO.	REV
A	N/A	HLP-260676-B-10	1

SAVED AS: HLP-260676-B-10.DWG FINISHED ASSY: HLP-260676-B-10 SHEET 1 OF 1

ASIZE